KEYPAD

Series AC

AC 100

Voltage 12V AC/DC

12 button matrix-encoded keypad for **access control of one or two doors**.

OPENERS & CLOSERS Keypad allows to open two doors from only one terminal, and select two opening functions:

- Activates the lock for a preset time.
- Activates the lock until re-entering the code.

Very easy to install with high level of security. During blackouts all the data remain stored.

Technical features
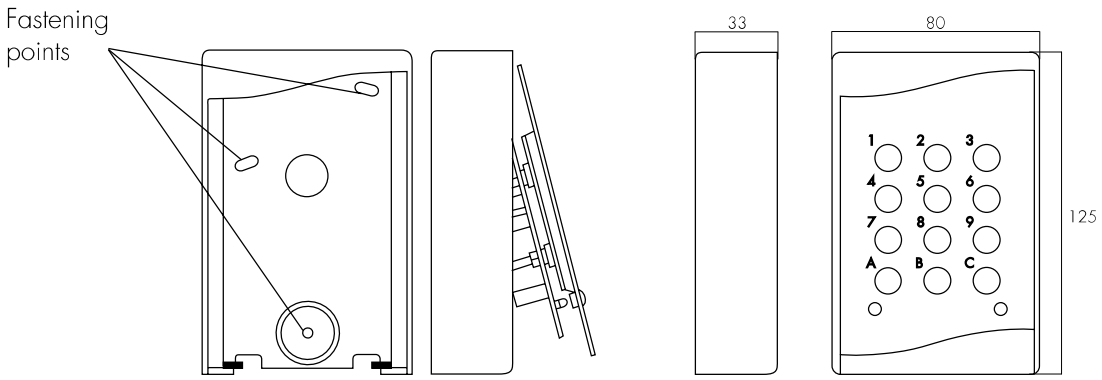
- Anti-vandal.
- Stainless steel buttons
- Housing: grey painted steel
- Timer: 1 to 99 seconds
- Relay: 12V AC - 2A max
- Up to 12 different codes
- Consumption: 0,1A (start-up) 0,02 (stand-by)
- Guaranteed 3 years
- IP45 Certified